Field Control Layer Device

BACnet Application Specific Controller

DSCU842B

【Description】

DSCU842B is a BTL listed standalone BACnet B-ASC class programmable controller. It is designed for monitor and control building electromechanical device, large AHU, clean room, fume hood, large-scale end device control. It uses 32-bit microprocessor core, transmission rate up to 76,800 bps, transmission distance up to 1,200 meters. DSCU842B has 8 Universal Inputs(UI), 4 Binary Outputs (BO) and 2 Analog Outputs (AO). In addition, it has an EIMnet port can connect up to 12 EIM series of expansion modules, allowing you to expand in response to the needs of various points. Another MSnet port can connect an external LCD control panel to make user operation and control easily at the job site. DSCU842B conforms to international BACnet MS/TP communication protocol and fully compatible with any BACnet system. It is absolutely the best product for your building.

【Features】

- BTL listed BACnet Application Specific Controller (B-ASC) class device.
- MS/TP(Master-Slave/Token-Passing) communication interface connect to the upper layer, global controller.
- MSnet communication interface can connect a MST20V, MST20S, DSP20U control panel or a MODBUS RTU device.
- EIMnet communication interface can connect up to 12 EIM I/O expansion modules, maximum limit less than 100 points.
- Universal Input (UI) has 12-bit resolution, selectable dry contact, pulse, 3K or 10KΩ NTC thermistor, 0~5VDC, 0~10VDC, 0~20mA or 4~20mA input signal.
- Binary Output (BO) has a 1,000VDC optical coupling isolate, 7A/250VAC/SPST relay (Relay), Status Indicator design.
- Analog Output (AO) has 12-bit resolution, can be DIP switch and software selected as 0~10VDC or 2~10VDC output signal.
- The user's control program can be downloaded, edited and saved in flash memory of the controller.
- Carry out calculations such as proportional, integral, differential, floating, logic, arithmetic and etc.
- 100 Binary Value (BV) and 100 Analog Value (AV) points, the analog value adopts high precision floating-point calculation.
- Priority control array by 16 for all BO, AO and BV.
- Provide power failure backup functions for all AI/BO/AO/BV/AV values keep in FRAM for at least 10 years.

【Specification】

AO Points	UI Points	BO Points	AO Points	BV Points	AV Points
2	8	4	2	100	100

Power Supply : 24VAC/VDC, 15VA.

Microprocessor : 32-bit high performance MCU, 20K RAM, 8K FRAM, and 128K Flash memory.

Universal Input (UI) : 12-bit resolution, selectable to accept dry contact, pulse, 3K or 10KΩ NTC thermistor, 0~10VDC, 4~20mA signal. Pulse signal to accept the largest 100HZ open collector or dry contact input.

Binary Output (BO) : 8A/250VAC non-voltage SPST contacts.

Analog Output (AO) : 12-bit resolution, 0~10VDC output signal.

Auxiliary Power : Provide 24VDC/160mA power supply for external sensor.

MS/TP Port : MS/TP MODBUS RS-485 bus, communication speed 9,600/ 19,200/ 38,400/ 76,800 bps, auto select, max. length 1,200 meters, having 2500Vrms optical coupling isolator and TVS ARRAY surge protection.

MSnet Port : MODBUS RTU RS-485 bus, communication speed 9,600/ 19,200/ 38,400 BPS, can connect a control panel. or a MODBUS master or slave device

EIM Port : MODBUS RTU RS-485, communication speed 38,400 BPS, max. distance 1,200 meters, up to 12 EIMs.

Environment : 0~50℃, 20~90%RH, non-condensing

Certification : CE, FCC, BTL(B-ASC), and RoHS

【Network Architecture】

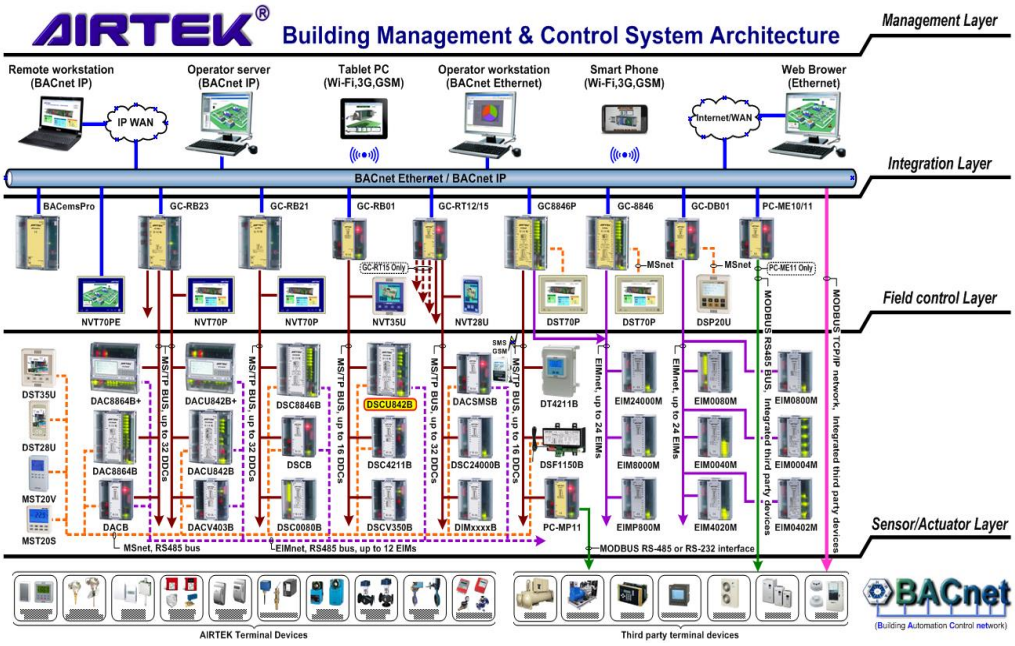

【Wiring Diagram】

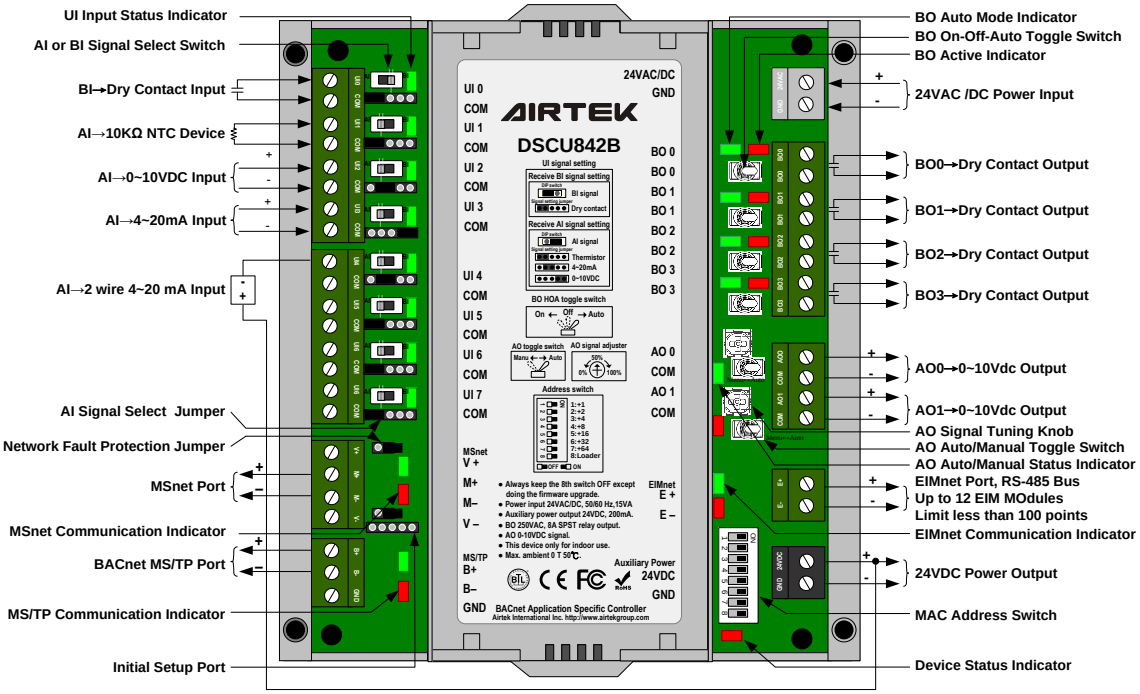

【Dimension】 Unit：mm

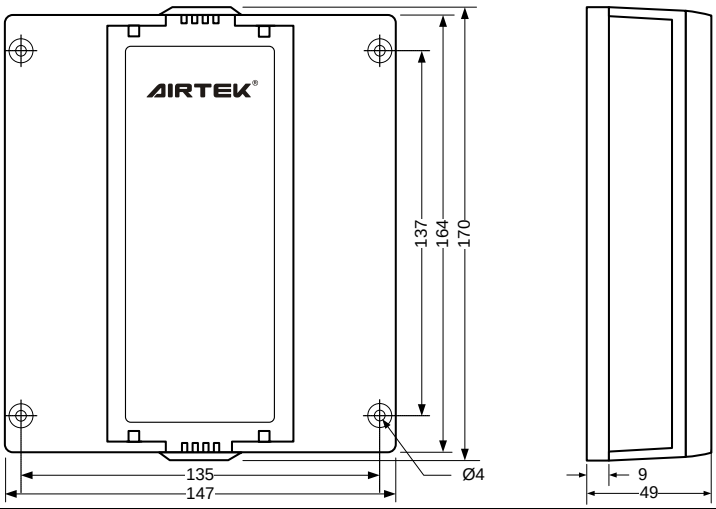

Please refer to http://www.airtekgroup.com for the most resent update information.